GENERAL INFORMATION

Project Name: _____

Item: _____

Quantity: _____

Model: EV101A-5

Length: _____

STANDARD SPECIFICATIONS

- ☐ 1" Diameter Brushed Stainless Steel Posts
- ☐ 3/8" Clear Tempered Front Glass Panels (max. span 66")
- ☐ 3/8" Clear Tempered Glass Top Shelf
- ☐ 1/4" Clear Tempered Glass End Panels
- ☐ 1" Radius Corners

OPTIONS AND ACCESSORIES

TUBE SIZE OPTIONS

- ☐ 1" Round (Standard)
- ☐ 1" Square
- ☐ 1-1/2" Round
- ☐ 1-1/2" Square

NSF-LISTED FINISH OPTIONS

- ☐ Brushed Stainless Steel #4 (Standard)
- ☐ Stainless Steel #8 (Chrome)
- ☐ Powder Coat Color: RAL #_____

GLASS FINISHES

- ☐ Clear (Standard)
- ☐ Low-Iron
- ☐ Frosted
- ☐ Frosted Logo/Imprint
- ☐ Pattern

GLASS PANEL OPTIONS

- ☐ 1/4" Glass (max. span 54")
- ☐ 3/8" Glass (max. span 66") (Standard)
- ☐ 1/2" Glass (max. span 72")

MOUNTING OPTIONS

BSI offers a variety of above counter and under counter mount installation solutions based on selected tube size. See Mounting Options pages for more details.

EV101A-5

Double Sided, Two Tier, Self Serve w/ Top Shelves, U-Shaped Post

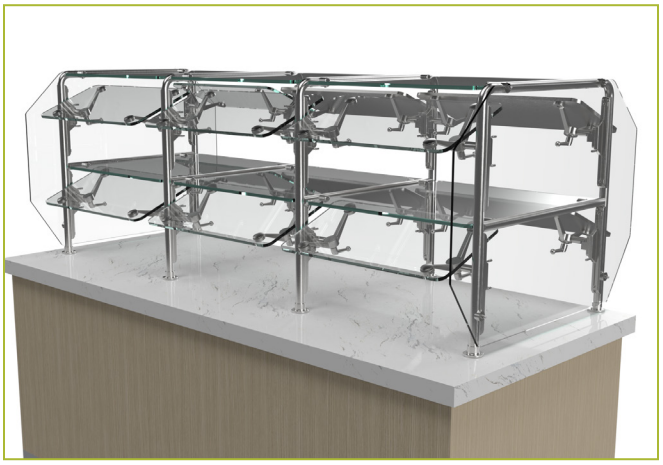

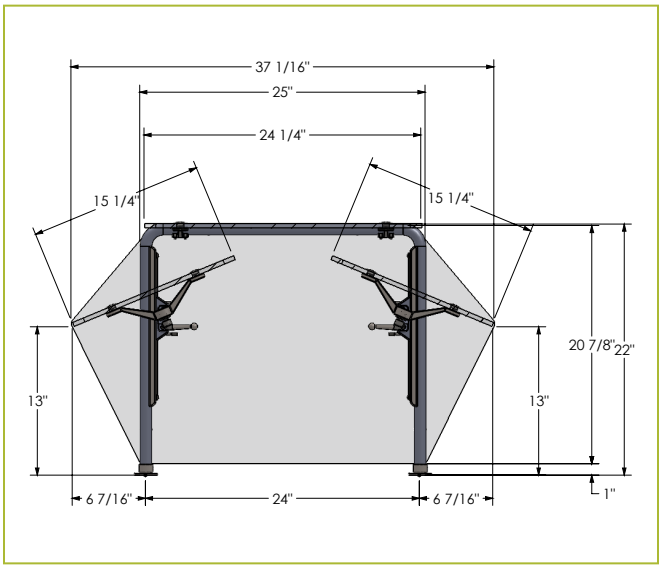

To meet NSF guidelines, end panels are included on all BSI quotations unless specifically excluded. (See end panel page for more details).

LIGHT AND WARMER OPTIONS

Light and warmer units are not connected to the food shield and require additional posts. E-Series light and warmer units are UL Listed and NSF approved.

Model #	Description
☐ 705E	Helios Light & Warmer Unit

Specifications subject to change without notice.

10/23